Signals and Systems Lecture-3: System Characteristics

Chadi Abou-Rjeily

Department of Electrical and Computer Engineering
Lebanese American University
chadi.abourjeily@lau.edu.lb

January 16, 2023

Causality (1)

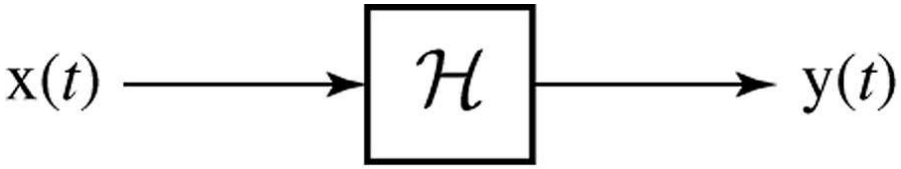

Causality:

- A system is causal if its response occurs only during or after the time in which the excitation is applied.
- In other words:
  - The current output depends only on the current and previous inputs.
  - The current output does not depend on future inputs.

Causality (2)

- Examples: Consider a system $x(t) \rightarrow y(t)$:
  - $y(t) = x^2(t) + x(t-1)$ is causal since the output at time t depends on the input at time t and on the input at the previous time $t-1$.
  - $y(t) = x(t+2)$ is not causal since the output at time t depends on the future input at time $t+2$. For example, the output $y(0)$ depends on the input at time 2.
  - $y(t) = x(3-t)$ is not causal. For $t = 0$, the output at time 0 depends on the future input at time 3.
  - $y(t) = x(|t|)$ is not causal. For $t = -1$, the output at time -1 depends on the future input at time 1.

Causality (3)

- The next figure shows a noncausal discrete filter:

$$y[n] = x[n-1] + x[n] + x[n+1]$$

where $y[n]$ is the n-th sample of the discrete output and $x[n]$ is the n-th sample of the discrete input.

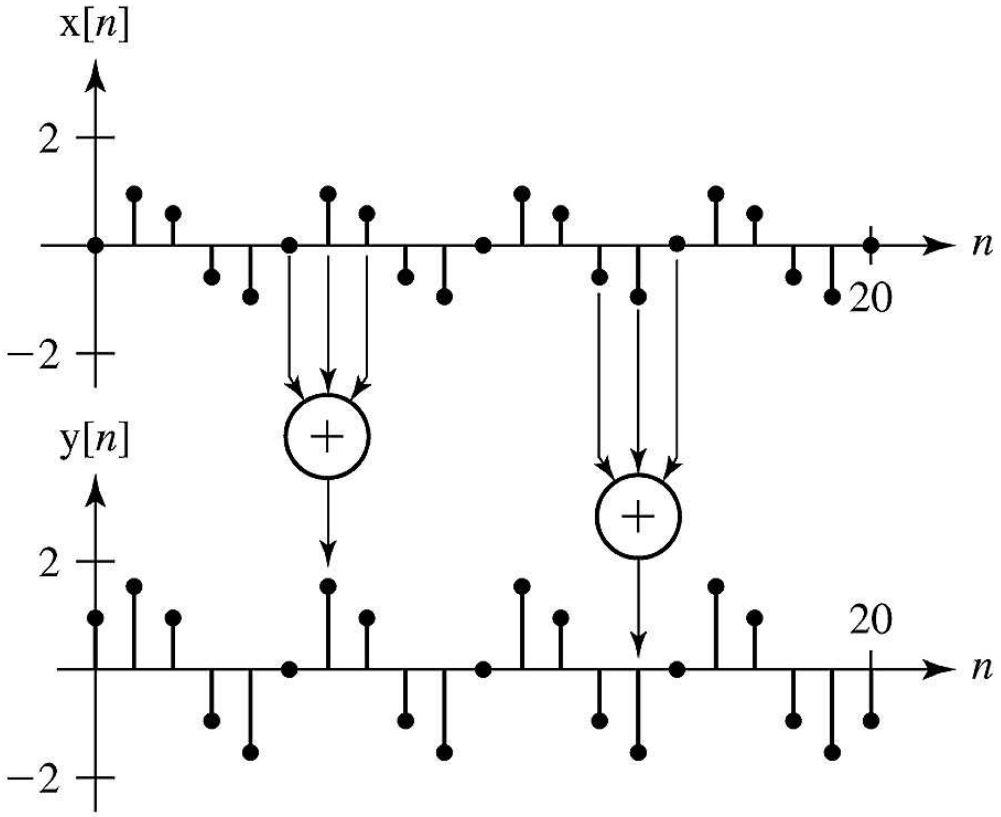

$y[n] = x[n-1] + x[n] + x[n+1]$

Time-Invariance (1)

Time-Invariance:

- If an excitation $x(t)$ causes a response $y(t)$ and an excitation $x(t-t_0)$ causes a response $y(t-t_0)$, for an arbitrary t_0, the system is said to be time invariant:

$$\begin{aligned} x(t) &\rightarrow y(t) \\ x(t-t_0) &\rightarrow y(t-t_0) \end{aligned}$$

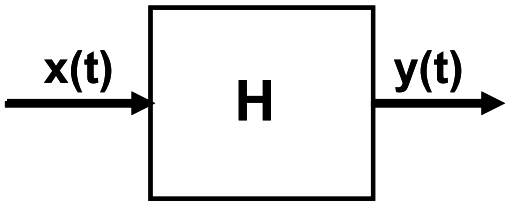

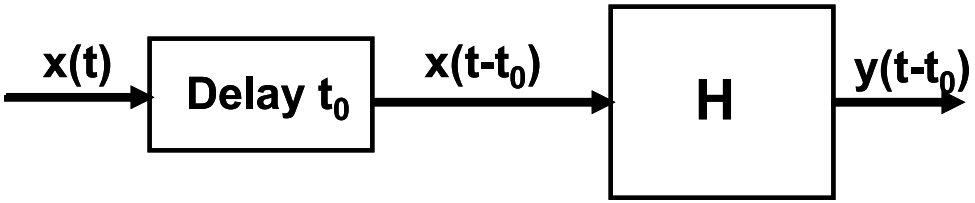

Time-Invariance (2)

- Consider the system described by: $y(t) = x^2(t) + 2x(t+1)$:
  - At time $t - t_0$, $y(t - t_0)$ is given by: $y(t - t_0) = x^2(t - t_0) + 2x(t - t_0 + 1)$.
  - When the input is $X(t) = x(t - t_0)$, the output is given by:

$$\begin{aligned} z(t) &= X^2(t) + 2X(t+1) \\ &= x^2(t - t_0) + 2x(t + 1 - t_0) \end{aligned}$$

  - $z(t) = y(t - t_0)$ and the system is time invariant.
- Consider system described by: $y(t) = tx(t)$:
  - At time $t - t_0$: $y(t - t_0) = (t - t_0)x(t - t_0)$.
  - When the input is $X(t) = x(t - t_0)$, the output is given by:

$$\begin{aligned} z(t) &= tX(t) \\ &= tx(t - t_0) \end{aligned}$$

  - $z(t) \neq y(t - t_0)$ and the system is not time invariant.

Time-Invariance (3)

- Consider the system described by: $y(t) = x(t^2)$:
  - At time $t - t_0$, $y(t - t_0)$ is given by: $y(t - t_0) = x((t - t_0)^2)$.
  - When the input is $X(t) = x(t - t_0)$, the output is given by:

$$\begin{aligned} z(t) &= X(t^2) \\ &= x(t^2 - t_0) \end{aligned}$$

  - $z(t) \neq y(t - t_0)$ and the system is not time invariant.

Linearity (1)

Linearity:

- If an excitation $x_1(t)$ causes a response $y_1(t)$ and an excitation $x_2(t)$ causes a response $y_2(t)$, then the excitation $\alpha x_1(t) + \beta x_2(t)$ will cause the response $\alpha y_1(t) + \beta y_2(t)$ (α and β are arbitrary constants):

$$\begin{aligned} x_1(t) &\rightarrow y_1(t) \\ x_2(t) &\rightarrow y_2(t) \\ \alpha x_1(t) + \beta x_2(t) &\rightarrow \alpha y_1(t) + \beta y_2(t) \end{aligned}$$

Linearity (2)

- For example, the system described by:

$$y(t) = 2tx(t) + x(t-3)$$

is linear:

$$\begin{aligned}
x_1(t) &\rightarrow y_1(t) = 2tx_1(t) + x_1(t-3) \\
x_2(t) &\rightarrow y_2(t) = 2tx_2(t) + x_2(t-3) \\
\alpha y_1(t) + \beta y_2(t) &= \alpha[2tx_1(t) + x_1(t-3)] + \beta[2tx_2(t) + x_2(t-3)]
\end{aligned}$$

- On the other hand, when the input is given by $x(t) = \alpha x_1(t) + \beta x_2(t)$, then the output becomes:

$$\begin{aligned}
z(t) &= 2t[\alpha x_1(t) + \beta x_2(t)] + [\alpha x_1(t-3) + \beta x_2(t-3)] \\
&= \alpha[2tx_1(t) + x_1(t-3)] + \beta[2tx_2(t) + x_2(t-3)] \\
&= \alpha y_1(t) + \beta y_2(t)
\end{aligned}$$

Linearity (3)

- For example, the system described by:

$$y(t) = x^2(t)$$

is not linear:

$$\begin{aligned} x_1(t) &\rightarrow y_1(t) = x_1^2(t) \\ x_2(t) &\rightarrow y_2(t) = x_2^2(t) \\ \alpha y_1(t) + \beta y_2(t) &= \alpha x_1^2(t) + \beta x_2^2(t) \end{aligned}$$

- On the other hand, when the input is given by $x(t) = \alpha x_1(t) + \beta x_2(t)$, then the output becomes:

$$\begin{aligned} z(t) &= [\alpha x_1(t) + \beta x_2(t)]^2 \\ &= \alpha^2 x_1^2(t) + 2\alpha\beta x_1(t) x_2(t) + \beta^2 x_2^2(t) \\ &\neq \alpha y_1(t) + \beta y_2(t) \end{aligned}$$